(c) JEPPESEN SANDERSON, INC., 2013, ALL RIGHTS RESERVED

JEPPESEN
JeppView for Windows

## List of pages in this Trip Kit

Trip Kit Index
Airport Information For URKG
Terminal Charts For URKG
Revision Letter For Cycle 17-2013
Change Notices
Notebook

(c) JEPPESEN SANDERSON, INC., 2013, ALL RIGHTS RESERVED


## General Information

Location: Gelendzhik Rus
IATA Code: GDZ
Lat/Long: N44° 34.9' E038° 00.8'
Elevation: 132 ft

Airport Use: Public
Magnetic Variation: 6.7°E

Fuel Types: Jet A-1
Customs: No
Airport Type: IFR
Landing Fee: No
Control Tower: Yes
Jet Start Unit: No
LLWS Alert: No
Beacon: No

Sunrise: 0243 Z
Sunset: 1617 Z,

## Runway Information

Runway: 01
Length x Width: 10171 ft x 148 ft
Surface Type: asphalt
TDZ-Elev: 90 ft
Lighting: Edge, ALS

Runway: 19
Length x Width: 10171 ft x 148 ft
Surface Type: asphalt
TDZ-Elev: 132 ft
Lighting: Edge

## Communication Information

ATIS 134.875
ATIS 133.375 Non-English
Gelendzhik Tower 122.7 Non-English
Gelendzhik Radar 124.425 Non-English
Gelendzhik Radar 121.0 Secondary Non-English
Gelendhzik Transit Operations 131.125 Non-English

| Apt Elev 132′ | Alt set: MM (hPa on request) QNH on request **(QFE)**<br>Trans level: FL60 Trans alt (hgt): 4730′ ***(4640′)***<br>Mountainous area. |
|---|---|

# DOROL 2, KUTON 2
# LIMAS 2, NALUD 2
# RULAB 2
# RWY 01 ARRIVALS

ASR IN OPERATION
WHEN UR(D)-102 AND/OR UR(D)-103 ACTIVE
ARRIVALS & HOLDING BY ATC

**FOR RUSSIAN USERS ONLY**

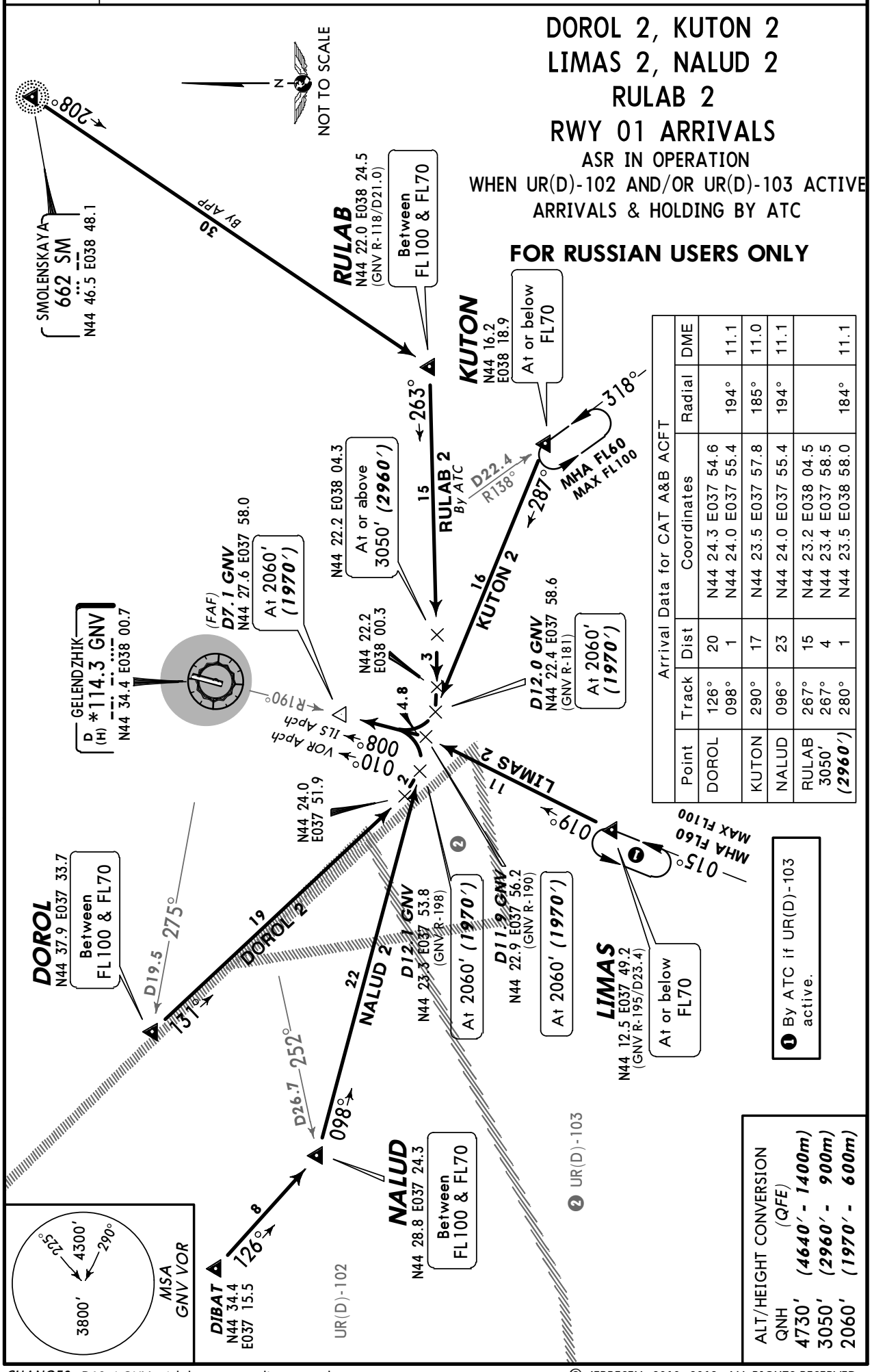


Arrival Data for CAT A&B ACFT

| Point | Track | Dist | Coordinates | Radial | DME |
|---|---|---|---|---|---|
| DOROL | 126°<br>098° | 20<br>1 | N44 24.3 E037 54.6<br>N44 24.0 E037 55.4 | 194° | 11.1 |
| KUTON | 290° | 17 | N44 23.5 E037 57.8 | 185° | 11.0 |
| NALUD | 096° | 23 | N44 24.0 E037 55.4 | 194° | 11.1 |
| RULAB 3050′ (2960′) | 267°<br>267°<br>280° | 15<br>4<br>1 | N44 23.2 E038 04.5<br>N44 23.4 E037 58.5<br>N44 23.5 E038 58.0 | 184° | 11.1 |

❶ By ATC if UR(D)-103 active.

*CHANGES:* D12.4 GNV withdrawn; coordinates update.

© JEPPESEN, 2010, 2012. ALL RIGHTS RESERVED.

| Apt Elev 132′ | Alt set: MM (hPa on request) QNH on request **(QFE)**<br>Trans level: FL60 Trans alt (hgt): 4730′ ***(4640′)***<br>Mountainous area. |
|---|---|

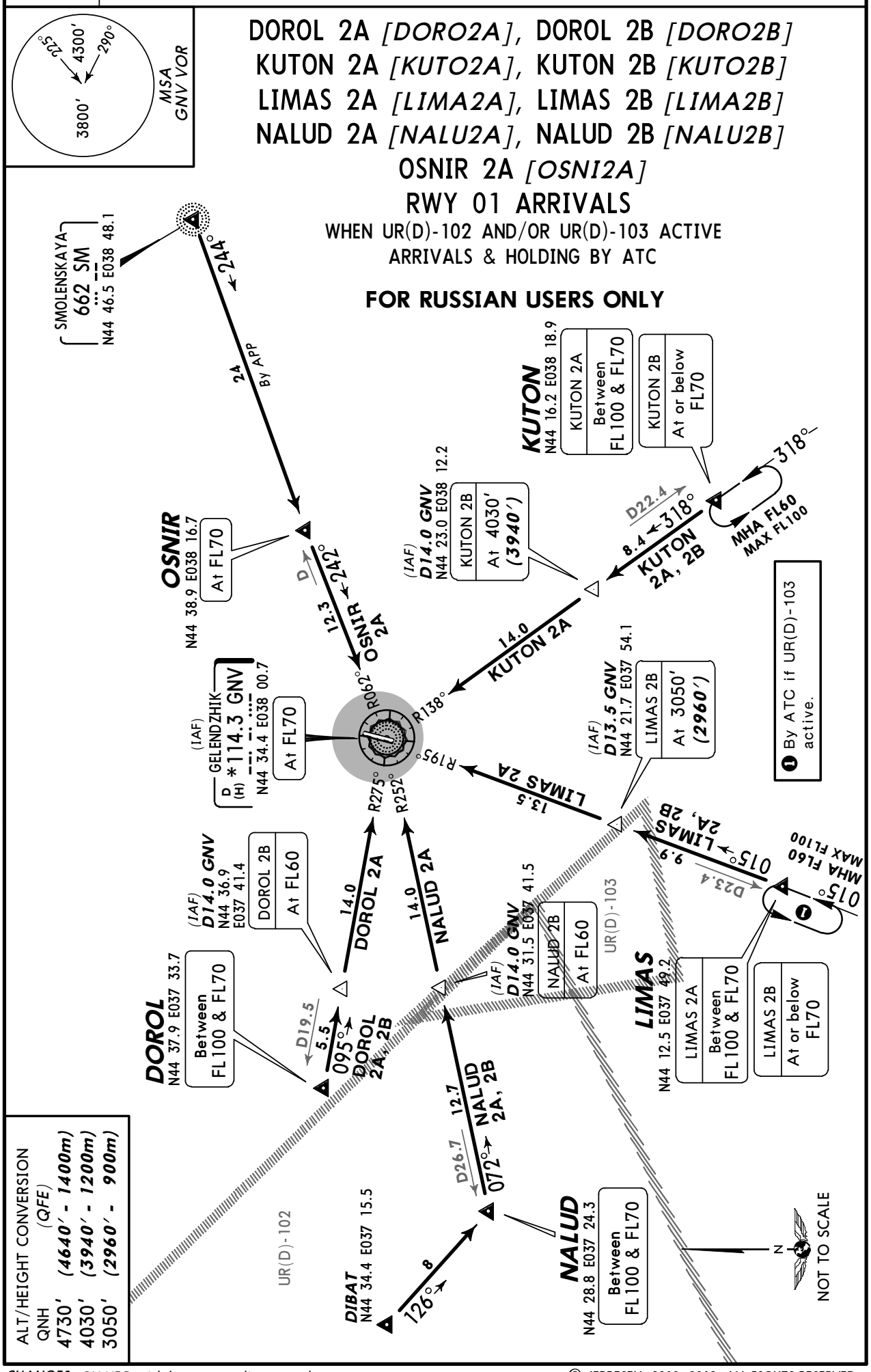


| ALT/HEIGHT CONVERSION (QFE) | |
|---|---|
| QNH | |
| 4730′ | ***(4640′ - 1400m)*** |
| 4030′ | ***(3940′ - 1200m)*** |
| 3050′ | ***(2960′ - 900m)*** |

*CHANGES:* GN NDB withdrawn; coordinates update.

© JEPPESEN, 2010, 2012. ALL RIGHTS RESERVED.

| Apt Elev 132′ | QNH on request **(QFE)** Trans level: FL60 Trans alt: 4730′ ***(4598′)*** Mountainous area. |
|---|---|

# DOROL 1A *[DORO1A]*, KUTON 1A *[KUTO1A]* LIMAS 1A *[LIMA1A]*, NALUD 1A *[NALU1A]* OSNIR 1A *[OSNI1A]* RWY 19 DEPARTURES

**FOR RUSSIAN USERS ONLY**

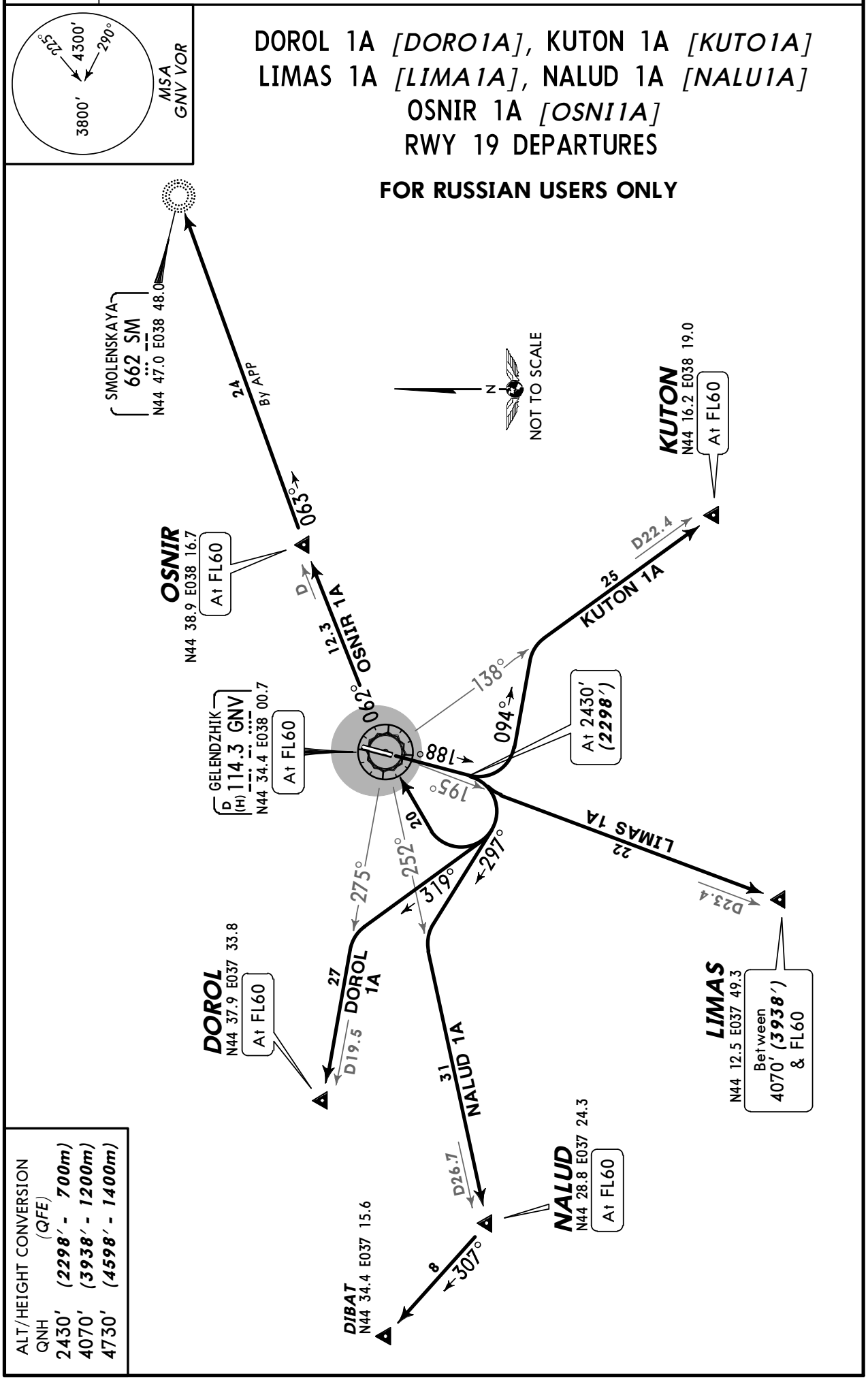


| ALT/HEIGHT CONVERSION | |
|---|---|
| QNH | *(QFE)* |
| 2430′ | ***(2298′ - 700m)*** |
| 4070′ | ***(3938′ - 1200m)*** |
| 4730′ | ***(4598′ - 1400m)*** |

*CHANGES:* Transition level; crossings.

© JEPPESEN, 2010, 2011. ALL RIGHTS RESERVED.

| Apt Elev 132′ | QNH on request **(QFE)** Trans level: FL60 Trans alt: 4730′ ***(4598′)*** Mountainous area. |
|---|---|

# DOROL 1B *[DORO1B]*, KUTON 1B *[KUTO1B]*
# LIMAS 1B *[LIMA1B]*, NALUD 1B *[NALU1B]*
# OSNIR 1B *[OSNI1B]*
## RWY 19 DEPARTURES
ASR IN OPERATION

**FOR RUSSIAN USERS ONLY**

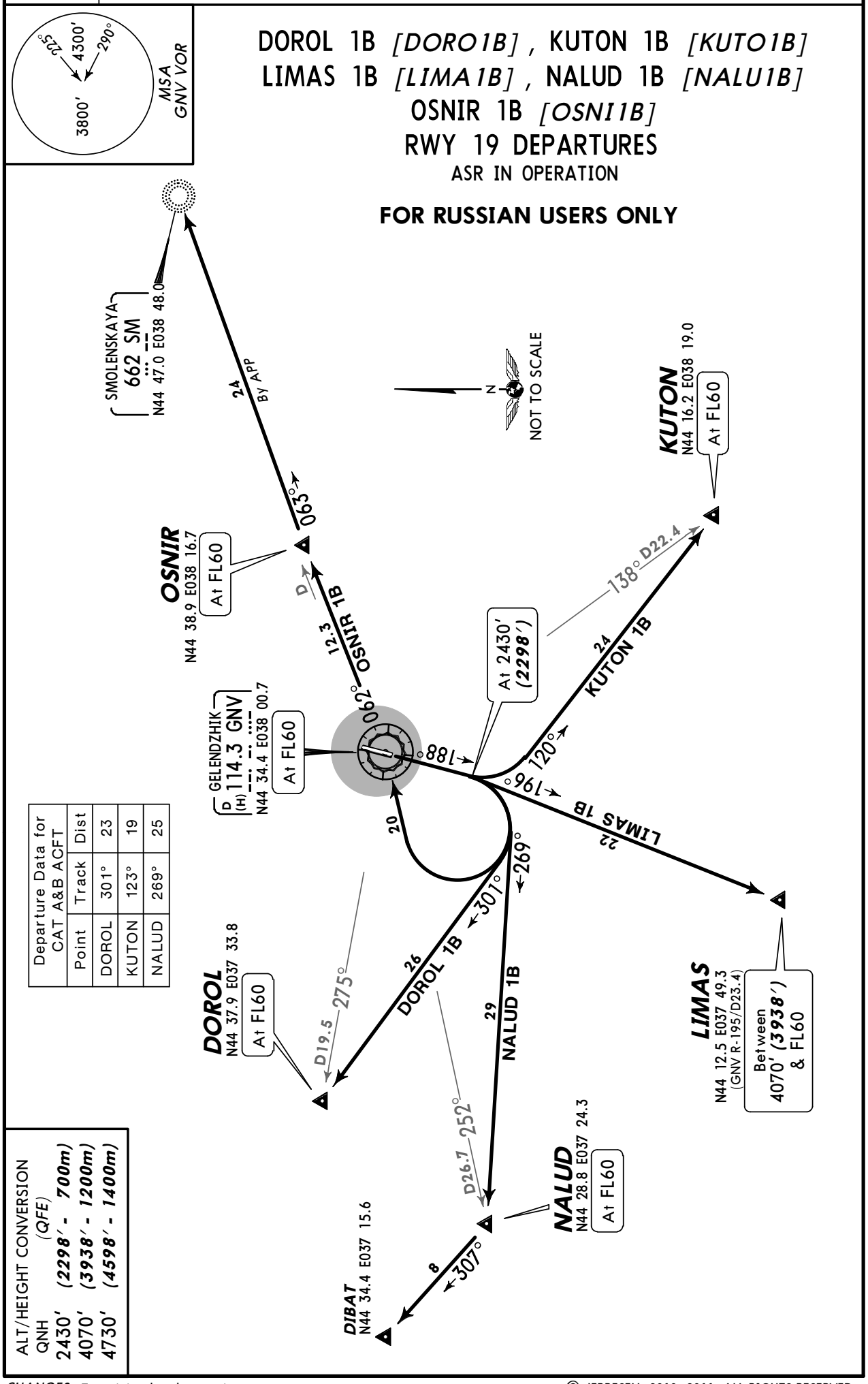


| Departure Data for CAT A&B ACFT | | |
|---|---|---|
| Point | Track | Dist |
| DOROL | 301° | 23 |
| KUTON | 123° | 19 |
| NALUD | 269° | 25 |

| ALT/HEIGHT CONVERSION | |
|---|---|
| QNH | *(QFE)* |
| 2430′ | ***(2298′ - 700m)*** |
| 4070′ | ***(3938′ - 1200m)*** |
| 4730′ | ***(4598′ - 1400m)*** |

*CHANGES:* Transition level; crossings.

© JEPPESEN, 2010, 2011. ALL RIGHTS RESERVED.

| Apt Elev 132′ | QNH on request **(QFE)** Trans level: FL60 Trans alt (hgt): 4730′ ***(4640′)***<br>1. Take-off should be carried out under condition, no tailwind component.<br>2. Mountainous area. |
|---|---|

# DOROL 1C *[DORO1C]*
# KUTON 1C *[KUTO1C]*
# LIMAS 1C *[LIMA1C]*
# NALUD 1C *[NALU1C]*
# OSNIR 1C *[OSNI1C]*
# RWY 01 DEPARTURES

**FOR RUSSIAN USERS ONLY**

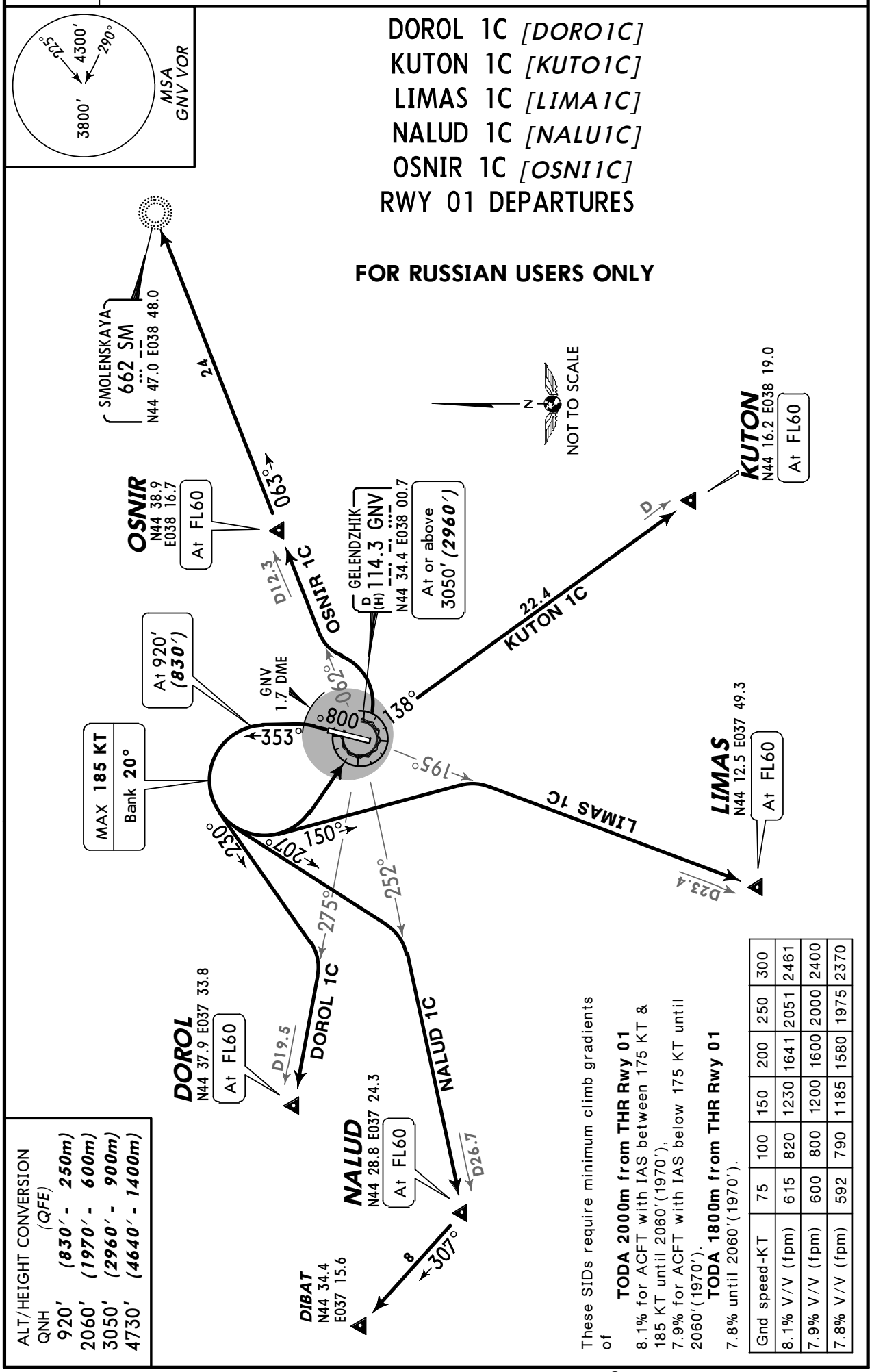


ALT/HEIGHT CONVERSION
QNH (QFE)
920′ (830′ - 250m)
2060′ (1970′ - 600m)
3050′ (2960′ - 900m)
4730′ (4640′ - 1400m)

These SIDs require minimum climb gradients of

**TODA 2000m from THR Rwy 01**
8.1% for ACFT with IAS between 175 KT & 185 KT until 2060′(1970′),
7.9% for ACFT with IAS below 175 KT until 2060′(1970′).

**TODA 1800m from THR Rwy 01**
7.8% until 2060′(1970′).

| Gnd speed-KT | 75 | 100 | 150 | 200 | 250 | 300 |
|---|---|---|---|---|---|---|
| 8.1% V/V (fpm) | 615 | 820 | 1230 | 1641 | 2051 | 2461 |
| 7.9% V/V (fpm) | 600 | 800 | 1200 | 1600 | 2000 | 2400 |
| 7.8% V/V (fpm) | 592 | 790 | 1185 | 1580 | 1975 | 2370 |

*CHANGES:* Transition level; crossings.

© JEPPESEN, 2011. ALL RIGHTS RESERVED.

| ATIS | *GELENDZHIK Tower |
|---|---|
| 134.87 (Russian 133.37) | 122.7 Russian only |

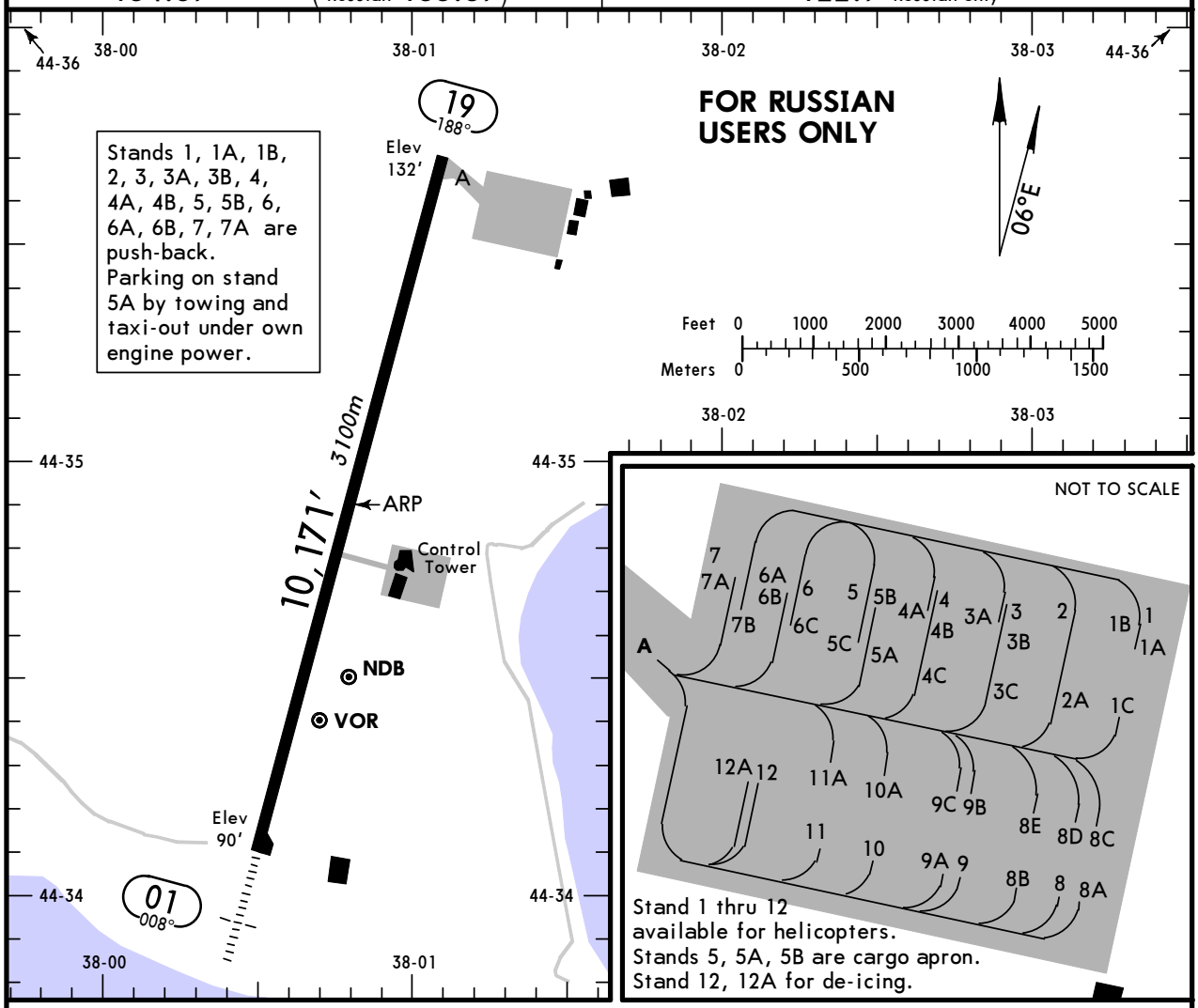


## INS COORDINATES

| STAND No. | COORDINATES | STAND No. | COORDINATES |
|---|---|---|---|
| 1 | N44 35.7 E038 01.5 | 5 thru 6C | N44 35.7 E038 01.3 |
| 1A | N44 35.6 E038 01.5 | 7, 7A, 7B | N44 35.7 E038 01.2 |
| 1B | N44 35.7 E038 01.5 | 8, 8A | N44 35.5 E038 01.4 |
| 1C | N44 35.6 E038 01.4 | 8B thru 9 | N44 35.6 E038 01.4 |
| 2 | N44 35.7 E038 01.4 | 9A | N44 35.6 E038 01.3 |
| 2A | N44 35.6 E038 01.4 | 9B, 9C | N44 35.6 E038 01.4 |
| 3, 3A, 3B | N44 35.7 E038 01.4 | 10 thru 11A | N44 35.6 E038 01.3 |
| 3C | N44 35.6 E038 01.4 | 12, 12A | N44 35.6 E038 01.2 |
| 4, 4A, 4B | N44 35.7 E038 01.3 | | |
| 4C | N44 35.6 E038 01.3 | | |

ADDITIONAL RUNWAY INFORMATION

| RWY | | | | | USABLE LENGTHS — LANDING BEYOND — Threshold | Glide Slope | TAKE-OFF | WIDTH |
|---|---|---|---|---|---|---|---|---|
| 01 | HIRL | ALS | PAPI (angle 2.67°) | RVR | | 9199′ *2804m* | ❶ | 148′ *45m* |
| 19 | | | | RVR | NA | | | |

❶ TAKE OFF RUN AVAILABLE
5906′(1800m) or 6562′(2000m) depending on length of TODA.

TAKE-OFF

| | AIR CARRIER (JAA) All Rwys — LVP must be in force: RCLM (DAY only) or RL | AIR CARRIER (JAA) All Rwys: RCLM (DAY only) or RL |
|---|---|---|
| A | *250m* | *400m* |
| B | | |
| C | | |
| D | *300m* | |

*CHANGES:* Stands & coordinates.

© JEPPESEN, 2010, 2012. ALL RIGHTS RESERVED.

| STRAIGHT-IN RWY | | A | B | C | D |
|---|---|---|---|---|---|
| 01 | ILS ❶ *ALS out* | NOT AUTHORIZED | NOT AUTHORIZED | **615**′(525′) **C2200m** C2400m | **648**′(558′) **C2300m** C2400m |
| | ILS ❷ | NOT AUTHORIZED | NOT AUTHORIZED | **681**′(591′) **C2400m** | **730**′(640′) **C2400m** |
| | ILS ❸ | **468**′(378′) **R1500m** | **566**′(476′) **R1500m** | **730**′(640′) **C2400m** | **910**′(820′) **C2400m** |
| | LOC | NOT AUTHORIZED | NOT AUTHORIZED | NOT AUTHORIZED | NOT AUTHORIZED |
| | VOR ❹ | **590**′(500′) **R1500m** | **590**′(500′) **R1500m** | **850**′(760′) **C2400m** | **950**′(860′) **C2400m** |
| | NDB | **1460**′(1370′) **C5000m** | **1460**′(1370′) **C5000m** | **1470**′(1380′) **C5000m** | **1470**′(1380′) **C5000m** |

❶ Missed apch climb grad MIM 5.0%.
❷ Missed apch climb grad MIM 4.0%.
❸ Missed apch climb grad MIM 2.5%.
❹ Continuous Descent Final Approach.

**TAKE-OFF RWY 01, 19**

| | LVP must be in force<br>RCLM (DAY only) or RL | RCLM (DAY only) or RL | NIL (DAY only) |
|---|---|---|---|
| A | 250m | 400m | 500m |
| B | | | |
| C | | | |
| D | 300m | | |


© JEPPESEN, 2011. ALL RIGHTS RESERVED.

BRIEFING STRIP

| *ATIS | *GELENDZHIK Tower |
|---|---|
| 134.87 (Russian 133.37) | 122.7 Russian only |

| LOC IGN | Final Apch Crs | GS | ILS DA(H) | Apt Elev 132′ |
|---|---|---|---|---|
| *110.1 | 008° | D6.9 IGN 2060′ (1970′) | Refer to Minimums | RWY 90′ |

**MISSED APCH:** As soon as possible CAT A & B: turn RIGHT (CAT B: MAX 145 KT) onto 211°, CAT C & D: turn LEFT (CAT C: MAX 160 KT/CAT D: MAX 185 KT) to intercept CAT A & B: R-166 GNV to D11.3 GNV, CAT C & D: R-218 GNV to D10.3 GNV climbing to 2060′ (1970′), then according to chart or as directed.

MSA GNV VOR: 3800′ (225°), 4300′ (290°)

Alt Set: MM (hPa on req) | QNH on req (QFE) | Trans level: FL 60 | Trans alt: 4730′ (4640′)

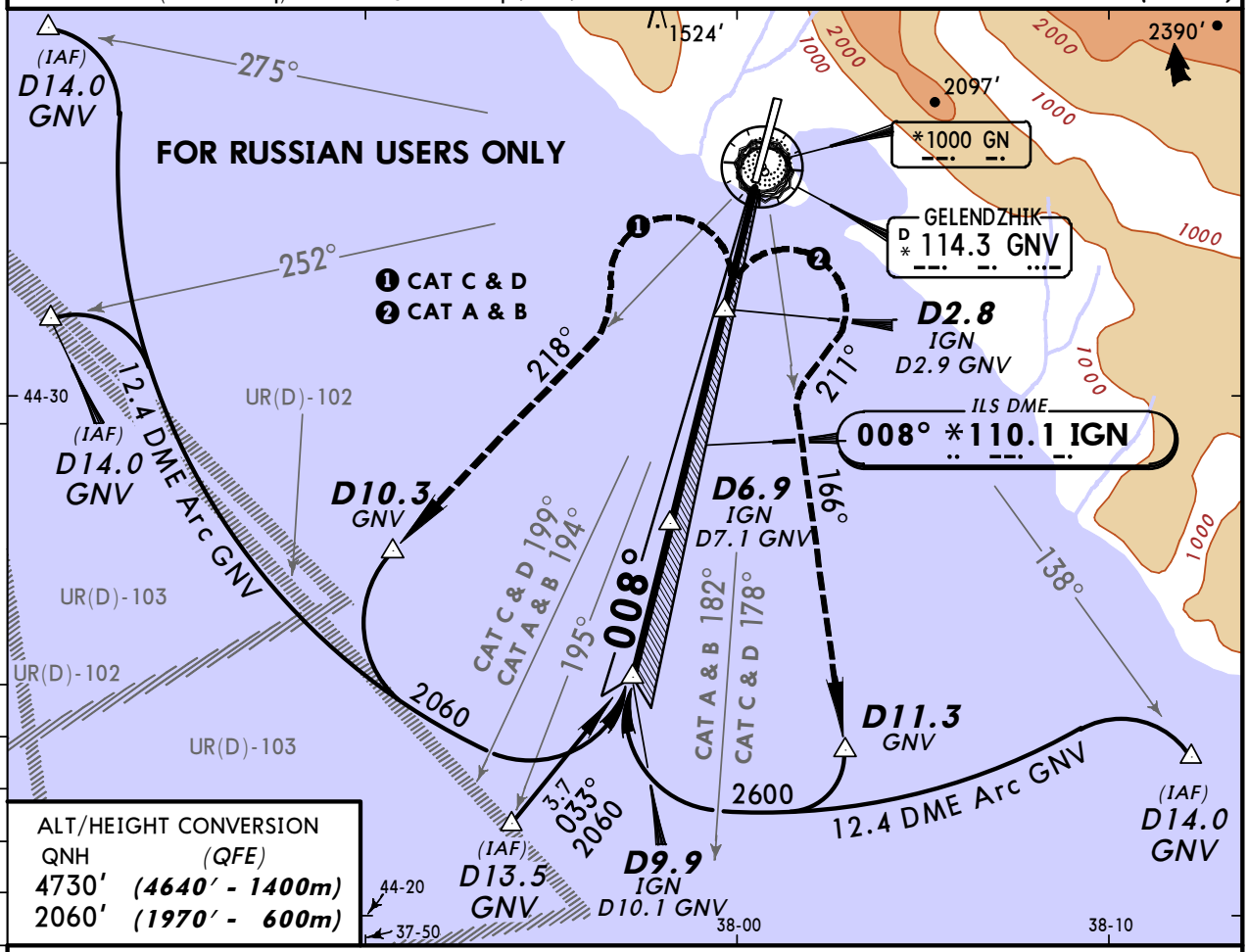


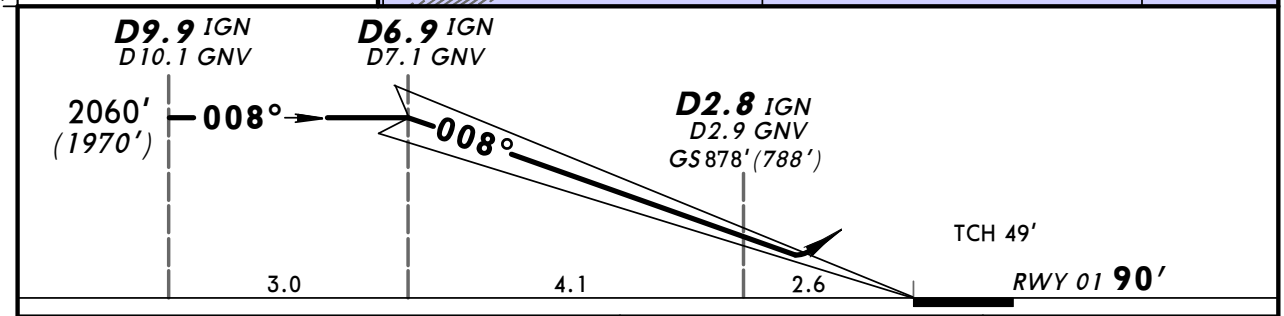


| Gnd speed-Kts | 70 | 90 | 100 | 120 | 140 | 160 |
|---|---|---|---|---|---|---|
| GS 2.67° | 331 | 425 | 472 | 567 | 661 | 756 |

ALS PAPI

Refer to Missed Apch above

STRAIGHT-IN LANDING RWY 01

| | Missed apch climb grad mim 5.0% | | ILS Missed apch climb grad mim 4.0% | | Missed apch climb grad mim 2.5% | | LOC (GS out) |
|---|---|---|---|---|---|---|---|
| DA(H) | C: 615′(525′) D: 648′(558′) | | C: 681′(591′) D: 730′(640′) | | A: 468′ (378′) B: 566′ (476′) C: 730′ (640′) D: 910′ (820′) | | |
| | FULL | ALS out | FULL | ALS out | FULL | ALS out | |
| A | NOT AUTHORIZED | | NOT AUTHORIZED | | 2200m | | NOT AUTHORIZED |
| B | | | | | 2800m | | |
| C | 3100m | | 3500m | | 3500m | | |
| D | 3300m | | 3900m | | 4800m | | |

PANS OPS

CHANGES: Holding withdrawn.

© JEPPESEN, 2011, 2012. ALL RIGHTS RESERVED.

URKG/GDZ
GELENDZHIK

JEPPESEN
2 NOV 12 (11-2) Eff 15 Nov

# GELENDZHIK, RUSSIA
# ILS DME Rwy 01

BRIEFING STRIP

| *ATIS | *GELENDZHIK Tower |
|---|---|
| 134.87 (Russian 133.37) | 122.7 Russian only |

| LOC IGN | Final Apch Crs | GS | ILS DA(H) | Apt Elev 132′ |
|---|---|---|---|---|
| *110.1 | 008° | D6.9 IGN 2060′ (1970′) | Refer to Minimums | RWY 90′ |

3800′ 225° 4300′ 290°
MSA GNV VOR

**MISSED APCH:** As soon as possible CAT A,B: turn RIGHT (CAT B: MAX 145 KT), CAT C,D: turn LEFT (CAT C: MAX 160 KT/CAT D: MAX 185 KT) onto 188° climbing to 2060′ (1970′), then as directed.

Alt Set: MM (hPa on req) | QNH on req (QFE) | Trans level: FL 60 | Trans alt: 4730′ (4640′)

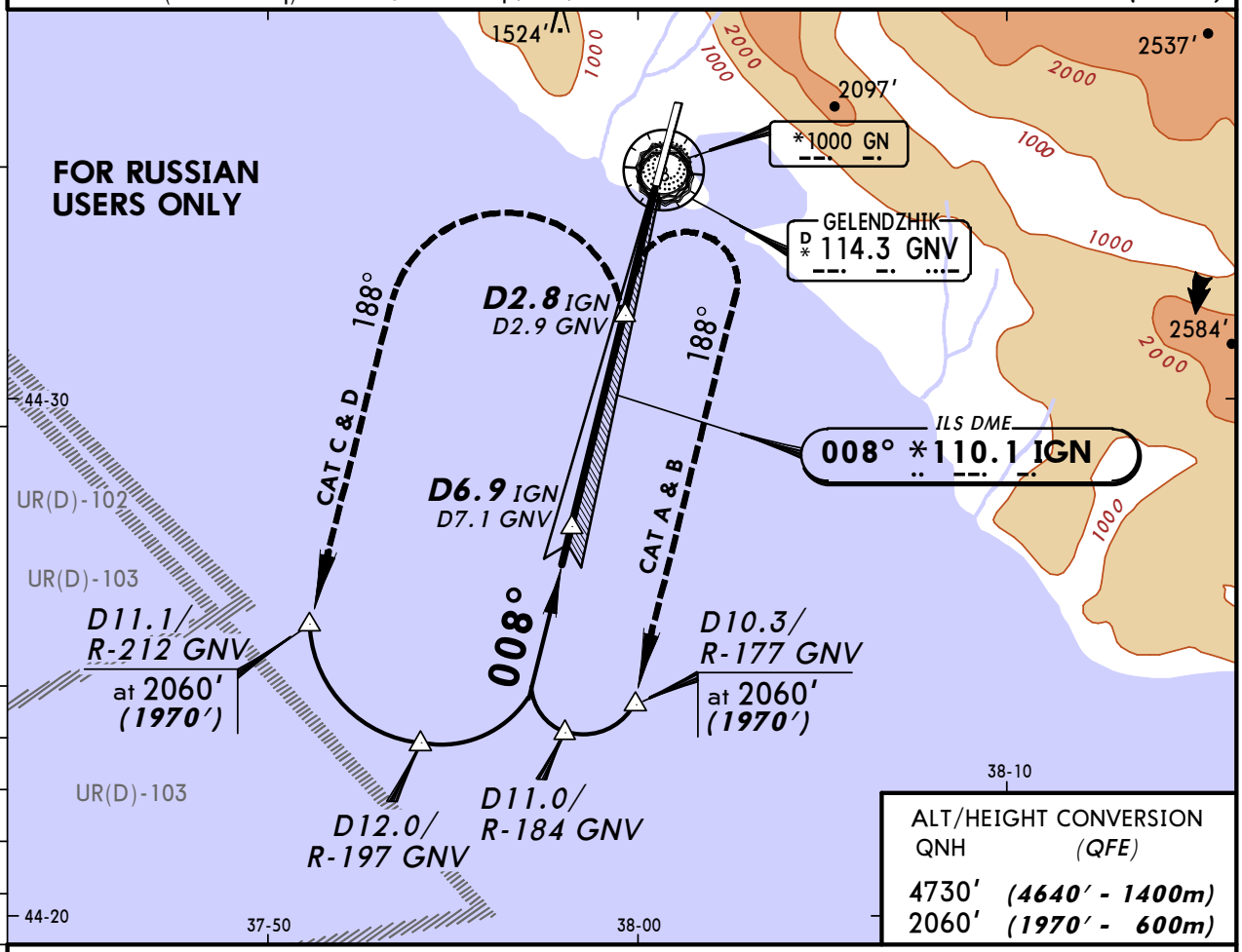


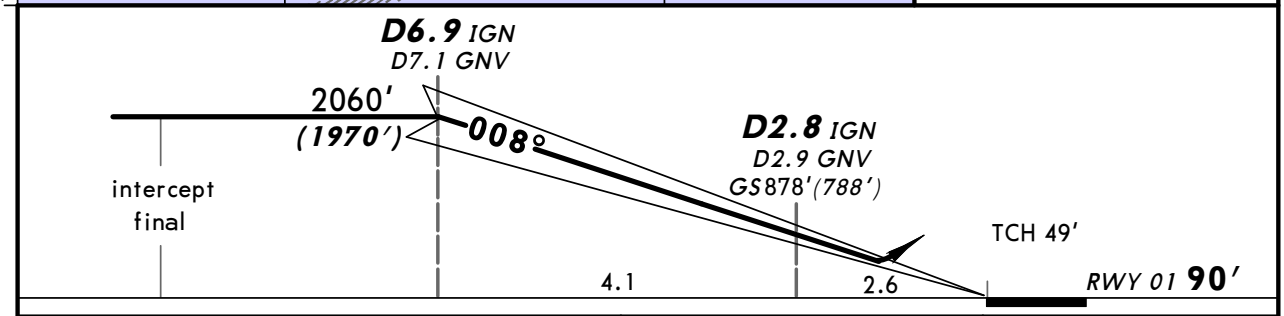


| Gnd speed-Kts | 70 | 90 | 100 | 120 | 140 | 160 |
|---|---|---|---|---|---|---|
| GS 2.67° | 331 | 425 | 472 | 567 | 661 | 756 |

ALS PAPI

Refer to Missed Apch above

STRAIGHT-IN LANDING RWY 01

| | Missed apch climb grad mim 5.0% | | ILS Missed apch climb grad mim 4.0% | | Missed apch climb grad mim 2.5% | | LOC (GS out) |
|---|---|---|---|---|---|---|---|
| DA(H) | C: 615′ (525′) D: 648′ (558′) | | C: 681′ (591′) D: 730′ (640′) | | A: 468′ (378′) B: 566′ (476′) C: 730′ (640′) D: 910′ (820′) | | |
| | FULL | ALS out | FULL | ALS out | FULL | ALS out | |
| PANS OPS A | NOT AUTHORIZED | | NOT AUTHORIZED | | 2200m | | NOT AUTHORIZED |
| PANS OPS B | | | | | 2800m | | |
| PANS OPS C | 3100m | | 3500m | | 3500m | | |
| PANS OPS D | 3300m | | 3900m | | 4800m | | |

CHANGES: Holding withdrawn.

© JEPPESEN, 2010, 2012. ALL RIGHTS RESERVED.

URKG/GDZ
GELENDZHIK

JEPPESEN
2 NOV 12
Eff 15 Nov
(11-3)
CAT C & D

# GELENDZHIK, RUSSIA
## via VOR ILS DME Rwy 01

BRIEFING STRIP

| *ATIS | *GELENDZHIK Tower |
|---|---|
| 134.87 (Russian 133.37) | 122.7 Russian only |

| LOC IGN | Final Apch Crs | GS | ILS DA(H) | Apt Elev 132′ |
|---|---|---|---|---|
| *110.1 | 008° | D6.9 IGN 2060′ (1970′) | Refer to Minimums | RWY 90′ |

3800′ 225° 4300′ 290°
MSA GNV VOR

**MISSED APCH:** As soon as possible turn LEFT (CAT C: MAX 160 KT/ CAT D: MAX 185 KT) onto 164° to intercept R-209 GNV to D12.7 GNV climbing to 3380′ (3290′), then according to chart or as directed.

Alt Set: MM (hPa on req) QNH on req (QFE) Trans level: FL 60 Trans alt: 4730′ (4640′)

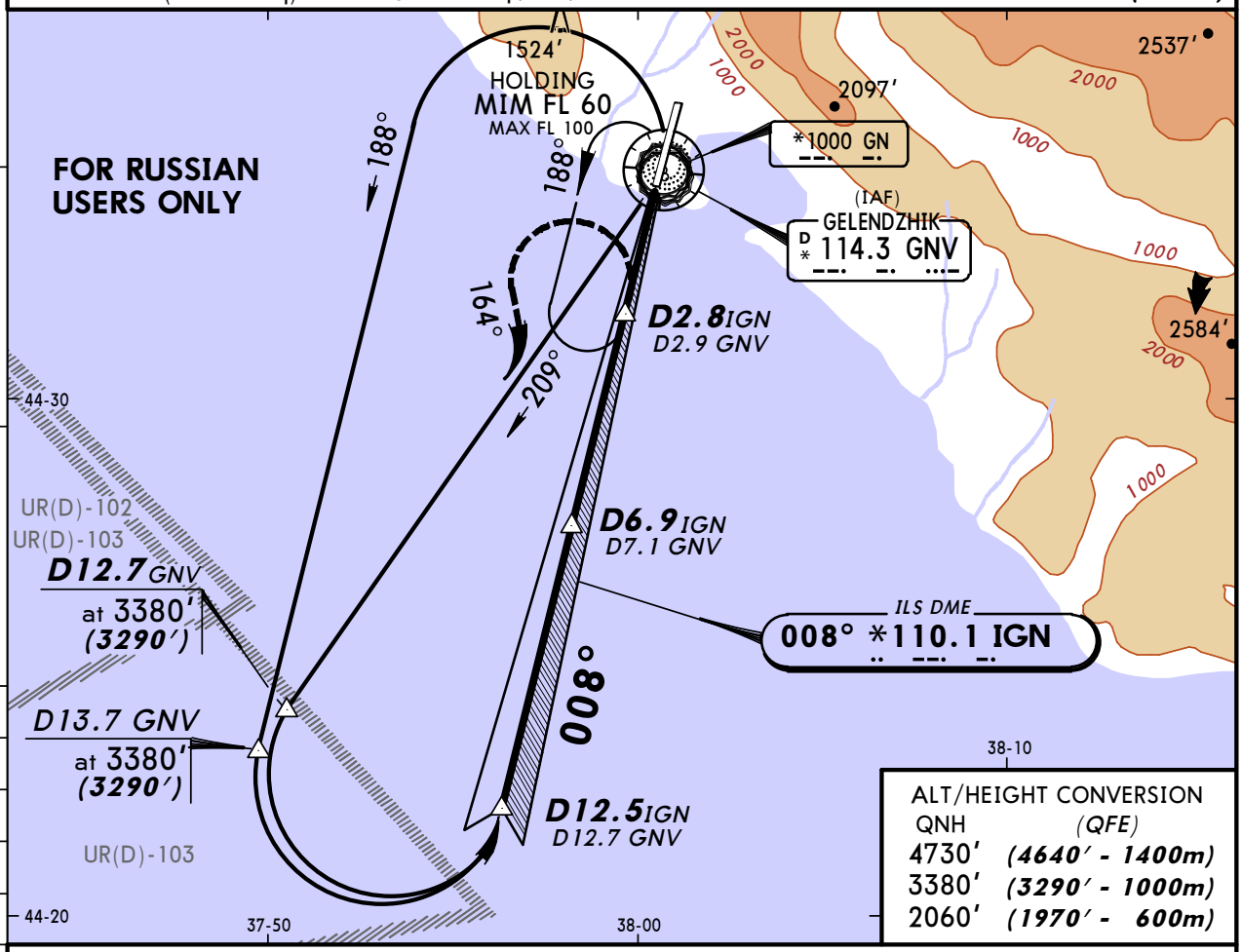


ALT/HEIGHT CONVERSION

| QNH | (QFE) |
|---|---|
| 4730′ | (4640′ - 1400m) |
| 3380′ | (3290′ - 1000m) |
| 2060′ | (1970′ - 600m) |

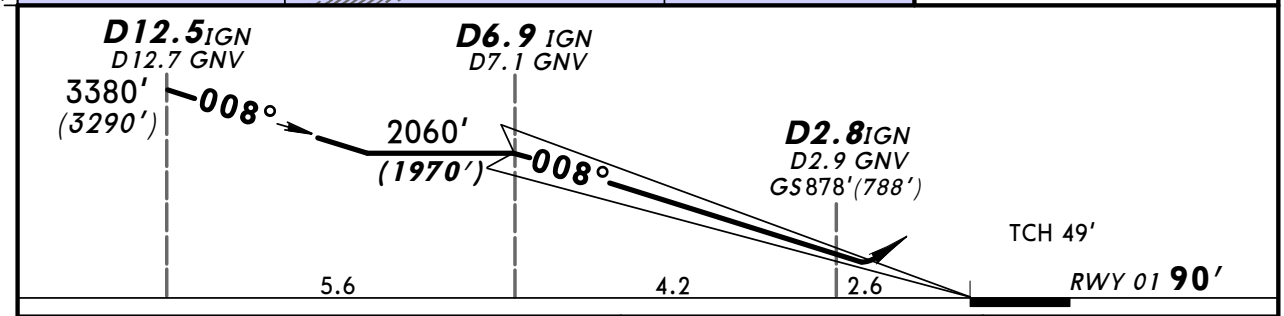


| Gnd speed-Kts | 70 | 90 | 100 | 120 | 140 | 160 |
|---|---|---|---|---|---|---|
| GS 2.67° | 331 | 425 | 472 | 567 | 661 | 756 |

ALS PAPI

Refer to Missed Apch above

STRAIGHT-IN LANDING RWY 01

| | ILS Missed apch climb grad mim 5.0% | ILS Missed apch climb grad mim 4.0% | ILS Missed apch climb grad mim 2.5% | LOC (GS out) |
|---|---|---|---|---|
| DA(H) | C: 615′ (525′) D: 648′ (558′) | C: 681′ (591′) D: 730′ (640′) | C: 730′ (640′) D: 910′ (820′) | |
| | FULL / ALS out | FULL / ALS out | FULL / ALS out | |

PANS OPS

| | | | | |
|---|---|---|---|---|
| A | NOT AUTHORIZED | NOT AUTHORIZED | NOT AUTHORIZED | NOT AUTHORIZED |
| B | | | | |
| C | 3100m | 3500m | 3500m | |
| D | 3300m | 3900m | 4800m | |

*CHANGES:* Addinational DME reading.

© JEPPESEN, 2010, 2012. ALL RIGHTS RESERVED.

URKG/GDZ
GELENDZHIK

JEPPESEN
2 NOV 12
Eff 15 Nov
11-4
CAT A & B

# GELENDZHIK, RUSSIA
## via VOR ILS DME Rwy 01

BRIEFING STRIP

| *ATIS | *GELENDZHIK Tower |
|---|---|
| 134.87 (Russian 133.37) | 122.7 Russian only |

| LOC IGN | Final Apch Crs | GS | ILS DA(H) | Apt Elev 132' |
|---|---|---|---|---|
| *110.1 | 008° | D6.9 IGN 2060' (1970') | Refer to Minimums | RWY 90' |

**MISSED APCH:** As soon as possible turn RIGHT (CAT B: MAX 145 KT) onto 226° to intercept R-181 GNV to D12.7 GNV climbing to 3380' (3290'), then according to chart or as directed.

3800' 225° 4300' 290°
MSA GNV VOR

Alt Set: MM (hPa on req) QNH on req (QFE) Trans level: FL 60 Trans alt: 4730' (4640')

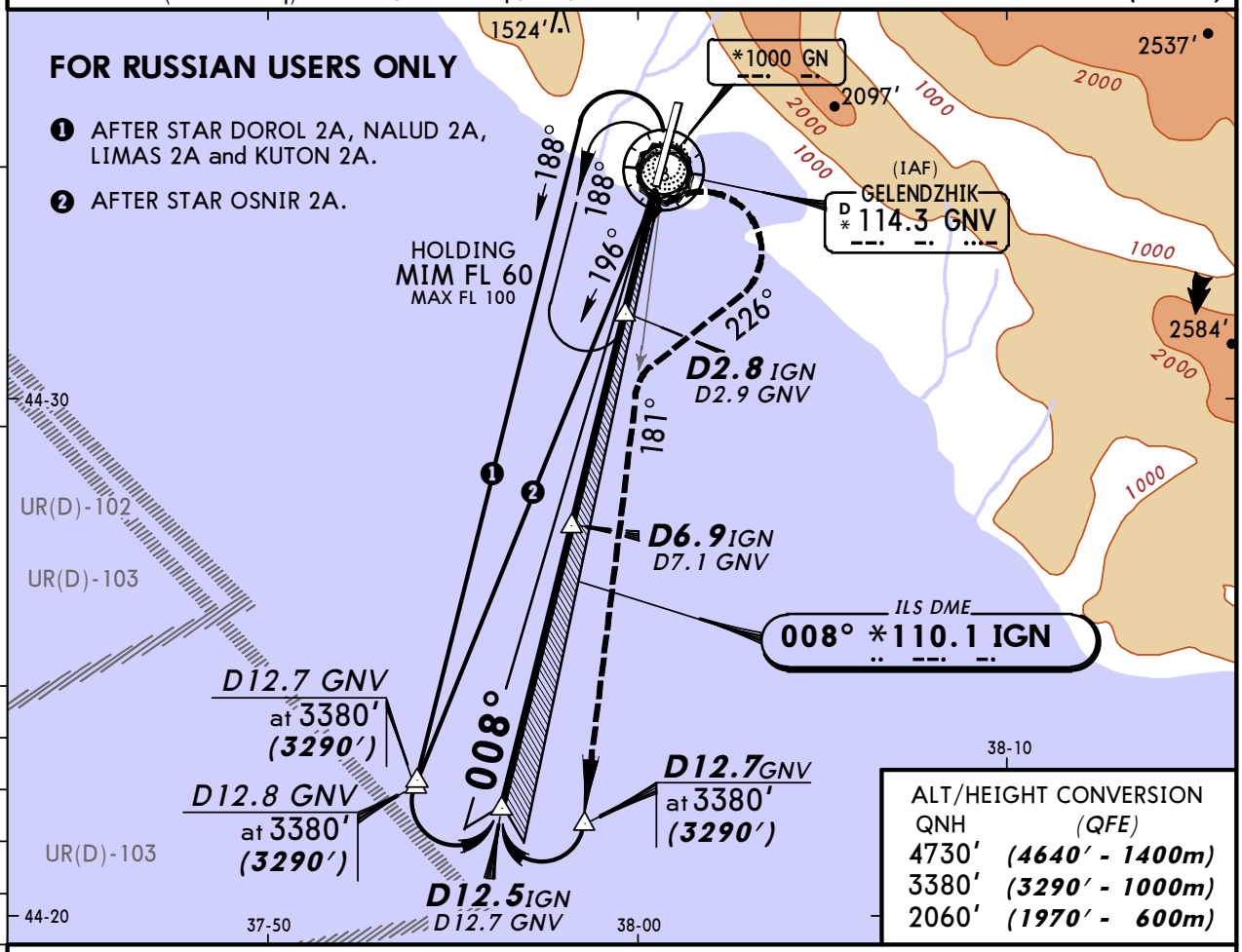


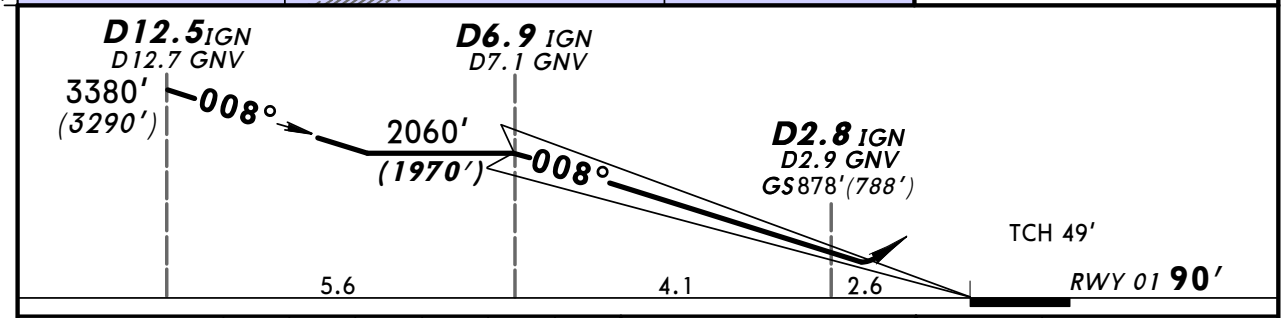


| Gnd speed-Kts | 70 | 90 | 100 | 120 | 140 | 160 |
|---|---|---|---|---|---|---|
| GS 2.67° | 331 | 425 | 472 | 576 | 661 | 756 |

ALS PAPI
3380' (3290') onto 226°
RT

STRAIGHT-IN LANDING RWY 01

| ILS DA(H) | LOC (GS out) |
|---|---|
| A: 468' (378') | |
| B: 566' (476') | |
| FULL / ALS out | |

PANS OPS

| | | |
|---|---|---|
| A | 2200m | NOT AUTHORIZED |
| B | 2800m | |
| C | NOT AUTHORIZED | |
| D | | |

CHANGES: None.

© JEPPESEN, 2010, 2011. ALL RIGHTS RESERVED.

URKG/GDZ
GELENDZHIK

JEPPESEN

2 NOV 12 (13-1) Eff 15 Nov

# GELENDZHIK, RUSSIA
## via Arc VOR DME Rwy 01

BRIEFING STRIP

| *ATIS | *GELENDZHIK Tower |
|---|---|
| 134.87 (Russian 133.37) | 122.7 Russian only |

| VOR | Final Apch Crs | Minimum Alt | MDA(H) | Apt Elev 132' |
|---|---|---|---|---|
| GNV *114.3 | 010° | D7.1 2060' (1970') | Refer to Minimums | RWY 90' |

**MISSED APCH:** As soon as possible CAT A & B: turn RIGHT (CAT B: MAX 145 KT) onto 213°, CAT C & D: turn LEFT (CAT C: MAX 160 KT/CAT D: MAX 200 KT) to intercept CAT A&B: R-168 to D11.3, CAT C&D: R-220 to D10.3 climbing to 2060 (1970'), then according to chart or as directed.

3800' 4300' 225° 290°

MSA GNV VOR

Alt Set: MM (hPa on req) QNH on req (QFE) Trans level: FL 60 Trans alt: 4730' (4640')

Final approach track offset 2° from rwy centerline.

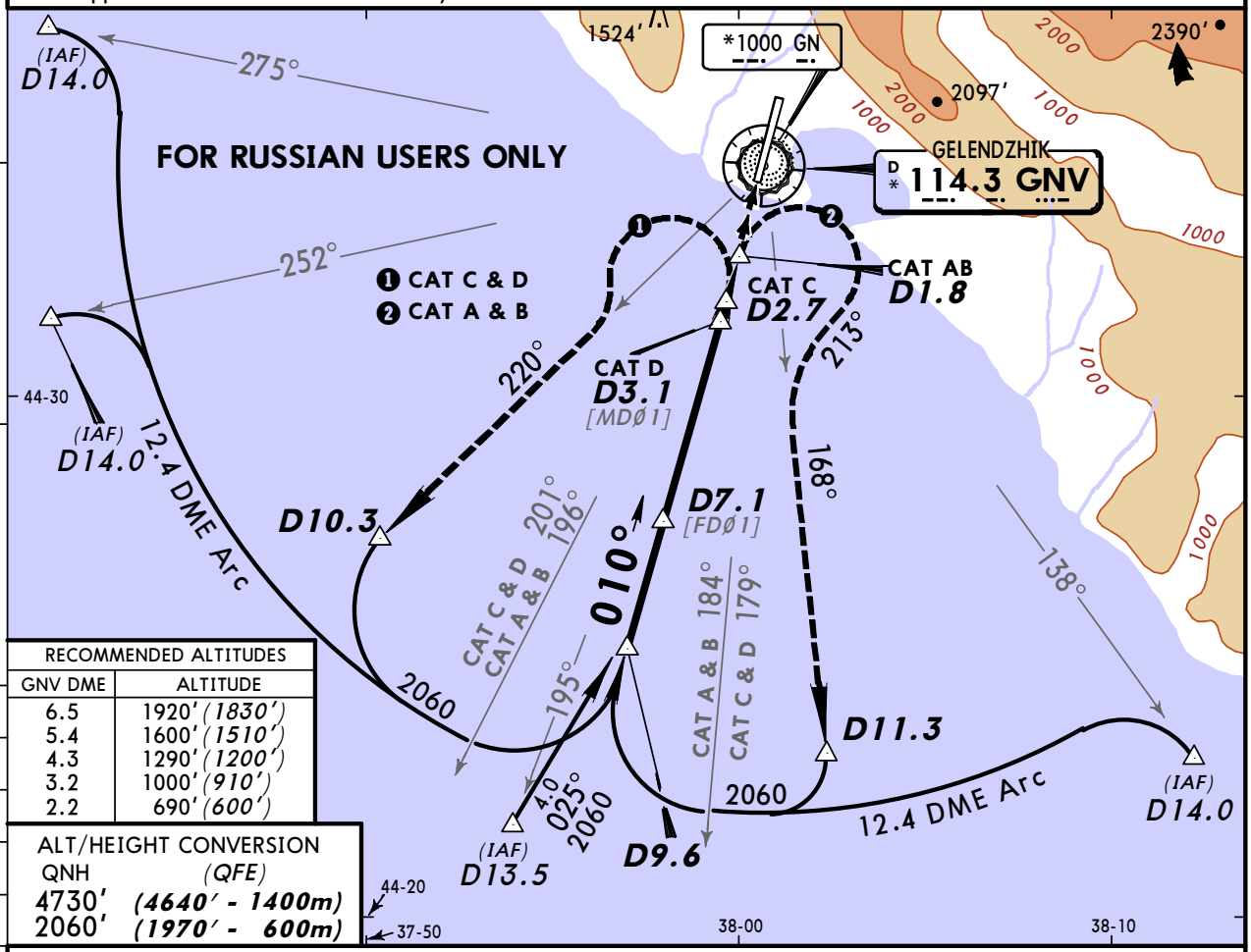


| RECOMMENDED ALTITUDES | |
|---|---|
| GNV DME | ALTITUDE |
| 6.5 | 1920' (1830') |
| 5.4 | 1600' (1510') |
| 4.3 | 1290' (1200') |
| 3.2 | 1000' (910') |
| 2.2 | 690' (600') |

| ALT/HEIGHT CONVERSION | |
|---|---|
| QNH | (QFE) |
| 4730' | (4640' - 1400m) |
| 2060' | (1970' - 600m) |

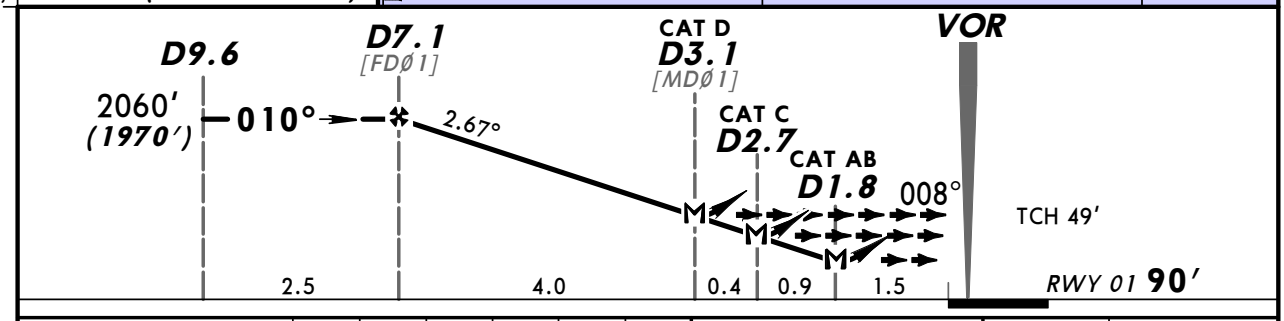


| Gnd speed-Kts | 70 | 90 | 100 | 120 | 140 | 160 |
|---|---|---|---|---|---|---|
| Descent Angle 2.67° | 331 | 425 | 472 | 567 | 661 | 756 |
| MAP at CAT AB: D1.8/ CAT C: D2.7/CAT D: D3.1 | | | | | | |

ALS PAPI

Refer to Missed Apch above

STRAIGHT-IN LANDING RWY 01

MDA(H) AB: 590' (500') C: 850' (760') D: 950' (860')

ALS out

PANS OPS

| | |
|---|---|
| A | 3200m |
| B | |
| C | 3600m |
| D | 4400m |

CHANGES: Missed apch. Holding withdrawn. Arrival bearing.

© JEPPESEN, 2011, 2012. ALL RIGHTS RESERVED.

URKG/GDZ
GELENDZHIK

JEPPESEN
2 NOV 12 (13-2) Eff 15 Nov

# GELENDZHIK, RUSSIA
# VOR DME Rwy 01

BRIEFING STRIP

| *ATIS | *GELENDZHIK Tower |
|---|---|
| 134.87 (Russian 133.37) | 122.7 Russian only |

| VOR | Final Apch Crs | Minimum Alt | MDA(H) | Apt Elev 132' |
|---|---|---|---|---|
| GNV *114.3 | 010° | D7.1 2060' (1970') | Refer to Minimums | RWY 90' |

**MISSED APCH:** CAT A & B: Turn RIGHT (CAT B: MAX 145 KT), CAT C & D: turn LEFT (CAT C: MAX 160 KT/CAT D: MAX 200 KT) onto 190° climbing to 2060' (1970'), then according to chart or as directed.

3800' 225° 4300' 290°
MSA GNV VOR

Alt Set: MM (hPa on req) QNH on req (QFE) Trans level: FL 60 Trans alt: 4730' (4640')
Final approach track offset 2° from rwy centerline.

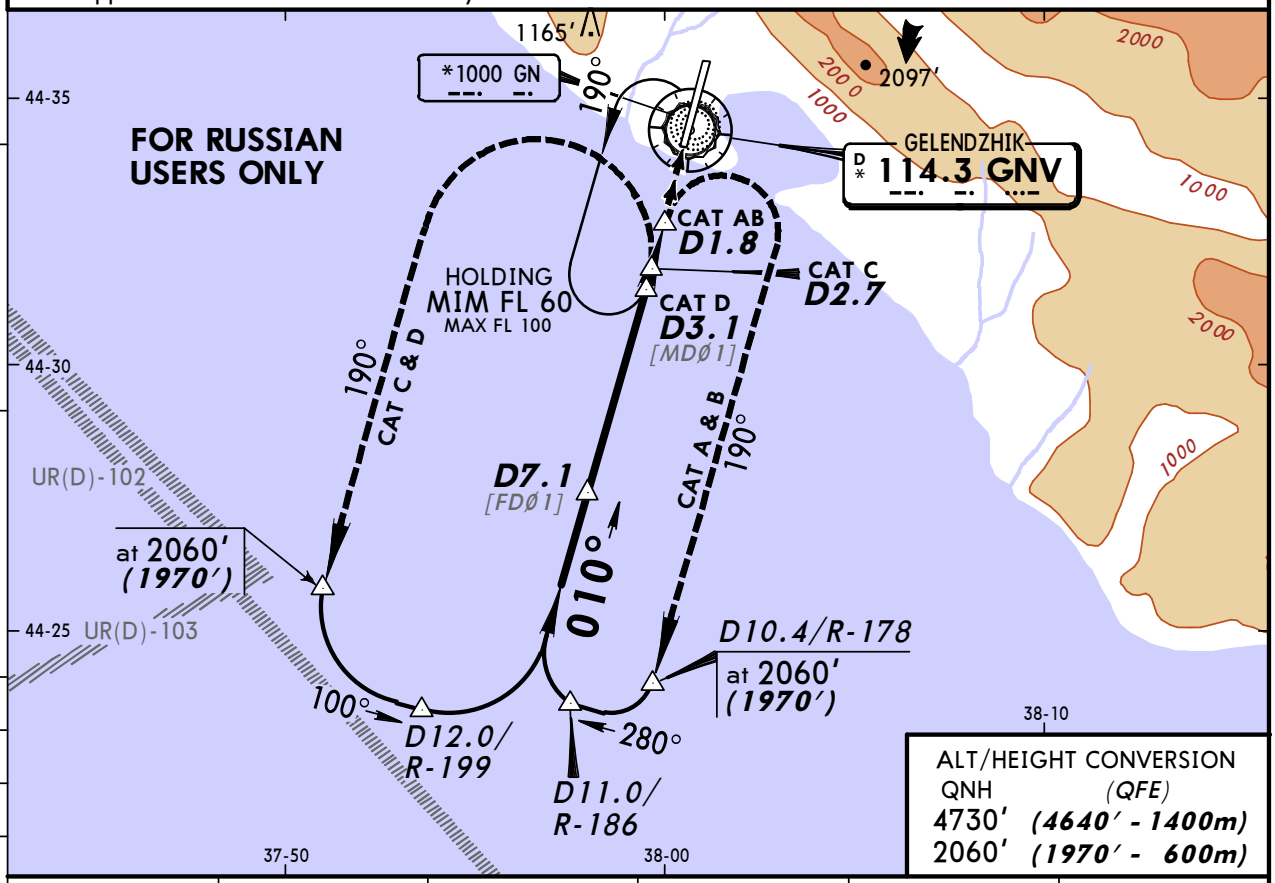


ALT/HEIGHT CONVERSION

| QNH | (QFE) |
|---|---|
| 4730' | (4640' - 1400m) |
| 2060' | (1970' - 600m) |

| GNV DME | 6.5 | 5.4 | 4.3 | 3.2 | 2.2 |
|---|---|---|---|---|---|
| ALTITUDE | 1920' (1830') | 1600' (1510') | 1290' (1200') | 1000' (910') | 690' (600') |

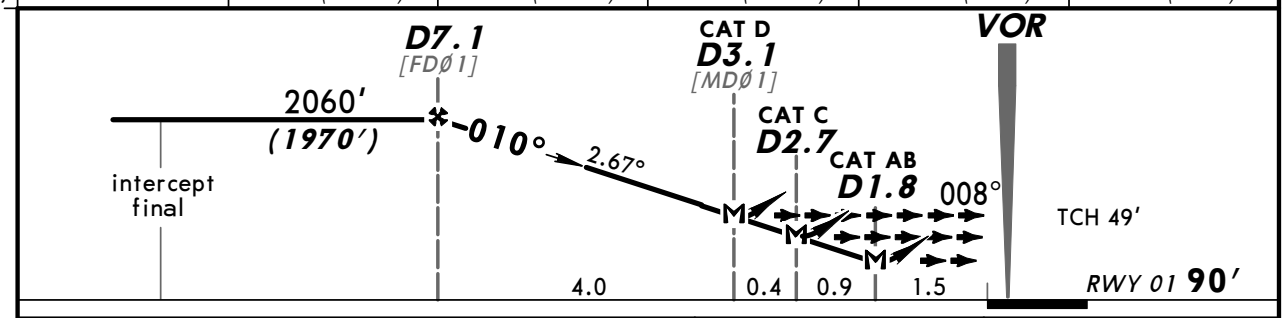


| Gnd speed-Kts | 70 | 90 | 100 | 120 | 140 | 160 |
|---|---|---|---|---|---|---|
| Descent Angle 2.67° | 331 | 425 | 472 | 567 | 661 | 756 |
| MAP at CAT AB: D1.8/ CAT C: D2.7/CAT D: D3.1 | | | | | | |

ALS PAPI

Refer to Missed Apch above

STRAIGHT-IN LANDING RWY 01

MDA(H) AB: 590' (500') C: 850' (760') D: 950' (860')

ALS out

PANS OPS

| | |
|---|---|
| A | 3200m |
| B | |
| C | 3600m |
| D | 4400m |

CHANGES: None.

© JEPPESEN, 2010, 2011. ALL RIGHTS RESERVED.

URKG/GDZ
GELENDZHIK

JEPPESEN
23 DEC 11 (13-3) CAT C & D

# GELENDZHIK, RUSSIA
## via VOR VOR DME Rwy 01

BRIEFING STRIP

| *ATIS | *GELENDZHIK Tower |
|---|---|
| 134.87 (Russian 133.37) | 122.7 Russian only |

| VOR | Final Apch Crs | Minimums Alt | MDA(H) | Apt Elev 132′ |
|---|---|---|---|---|
| GNV *114.3 | 010° | D7.1 2060′ (1970′) | Refer to Minimums | RWY 90′ |

**MISSED APCH:** Turn LEFT (CAT C: MAX 160 KT/CAT D: MAX 200 KT) onto 166° to intercept R-211 to D12.7 climbing to 3380′ (3290′), then according to chart or as directed.

MSA GNV VOR: 3800′ (225°–290°), 4300′

Alt Set: MM (hPa on req) | QNH on req (QFE) | Trans level: FL 60 | Trans alt: 4730′ (4640′)

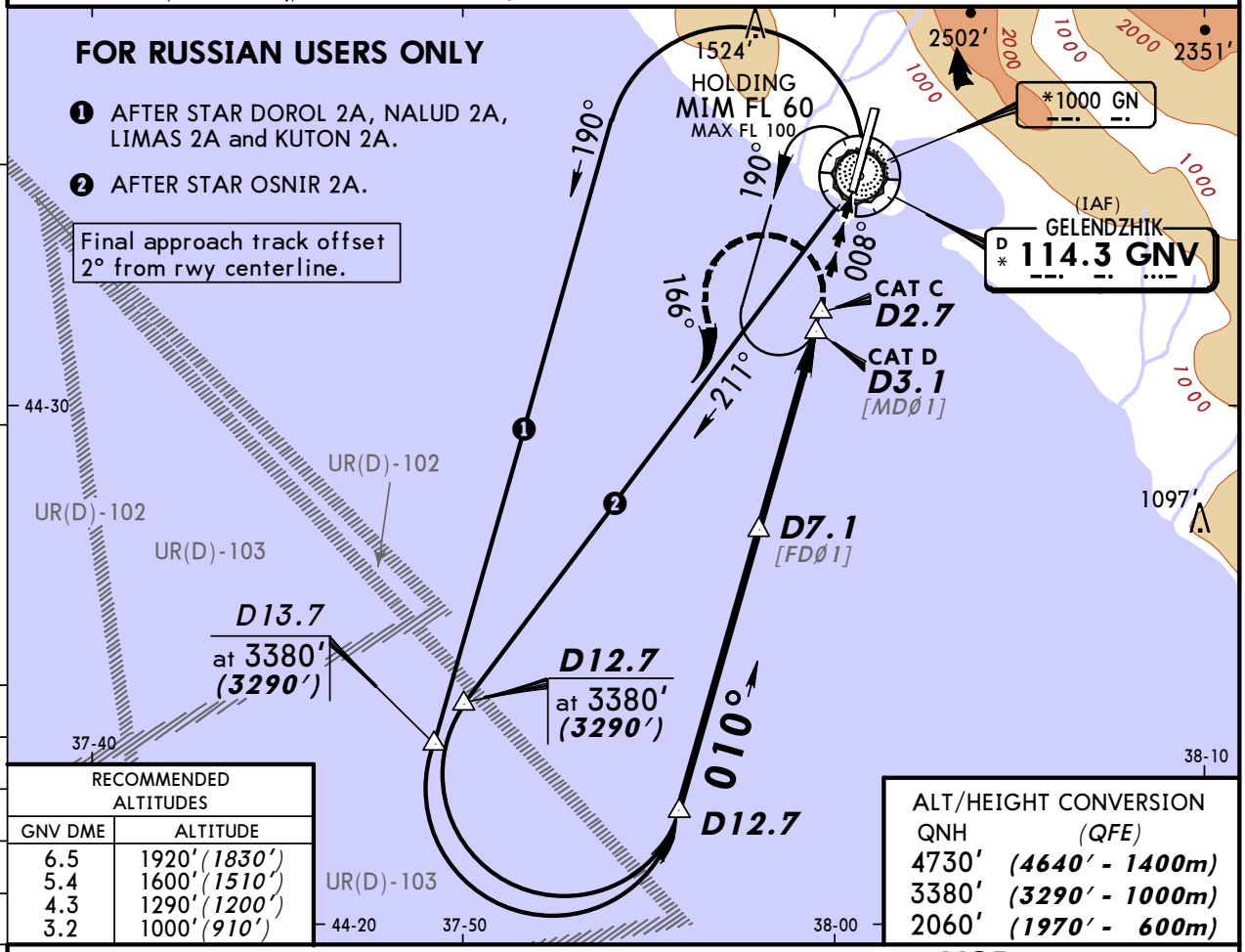


| RECOMMENDED ALTITUDES | |
|---|---|
| GNV DME | ALTITUDE |
| 6.5 | 1920′ (1830′) |
| 5.4 | 1600′ (1510′) |
| 4.3 | 1290′ (1200′) |
| 3.2 | 1000′ (910′) |

| ALT/HEIGHT CONVERSION | |
|---|---|
| QNH | (QFE) |
| 4730′ | (4640′ - 1400m) |
| 3380′ | (3290′ - 1000m) |
| 2060′ | (1970′ - 600m) |

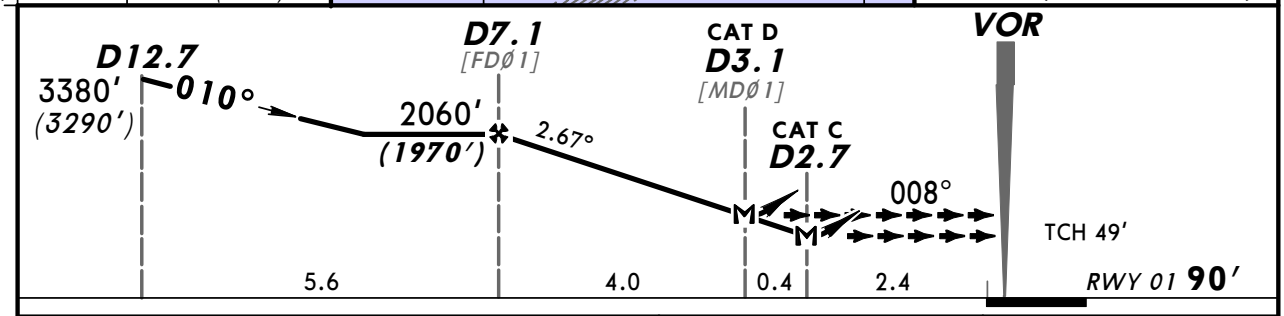


| Gnd speed-Kts | 70 | 90 | 100 | 120 | 140 | 160 |
|---|---|---|---|---|---|---|
| Descent angle 2.67° | 331 | 425 | 472 | 567 | 661 | 756 |
| MAP at CAT C: D2.7/ CAT D: D3.1 | | | | | | |

ALS PAPI

Refer to Missed Apch above

STRAIGHT-IN LANDING RWY 01

MDA(H) C: 850′ (760′)
D: 950′ (860′)

ALS out

PANS OPS

| | |
|---|---|
| A | NOT AUTHORIZED |
| B | |
| C | 3600m |
| D | 4400m |

CHANGES: Communications. Trans level. Holding altitude.

© JEPPESEN, 2010, 2011. ALL RIGHTS RESERVED.

URKG/GDZ
GELENDZHIK

JEPPESEN
23 DEC 11 (13-4) CAT A & B

# GELENDZHIK, RUSSIA
## via VOR VOR DME Rwy 01

BRIEFING STRIP

| *ATIS | *GELENDZHIK Tower |
|---|---|
| 134.87 (Russian 133.37) | 122.7 Russian only |

| VOR | Final Apch Crs | Minimums Alt | MDA(H) | Apt Elev 132' |
|---|---|---|---|---|
| GNV *114.3 | 010° | D7.1 2060' (1970') | 590' (500') | RWY 90' |

**MISSED APCH:** Turn RIGHT (CAT B: MAX 145 KT) onto 227° to intercept R-182 to D12.7 climbing to 3380' (3290'), then according to chart or as directed.

MSA GNV VOR: 3800' (225°–290°), 4300'

Alt Set: MM (hPa on req) | QNH on req (QFE) | Trans level: FL 60 | Trans alt: 4730' (4640')

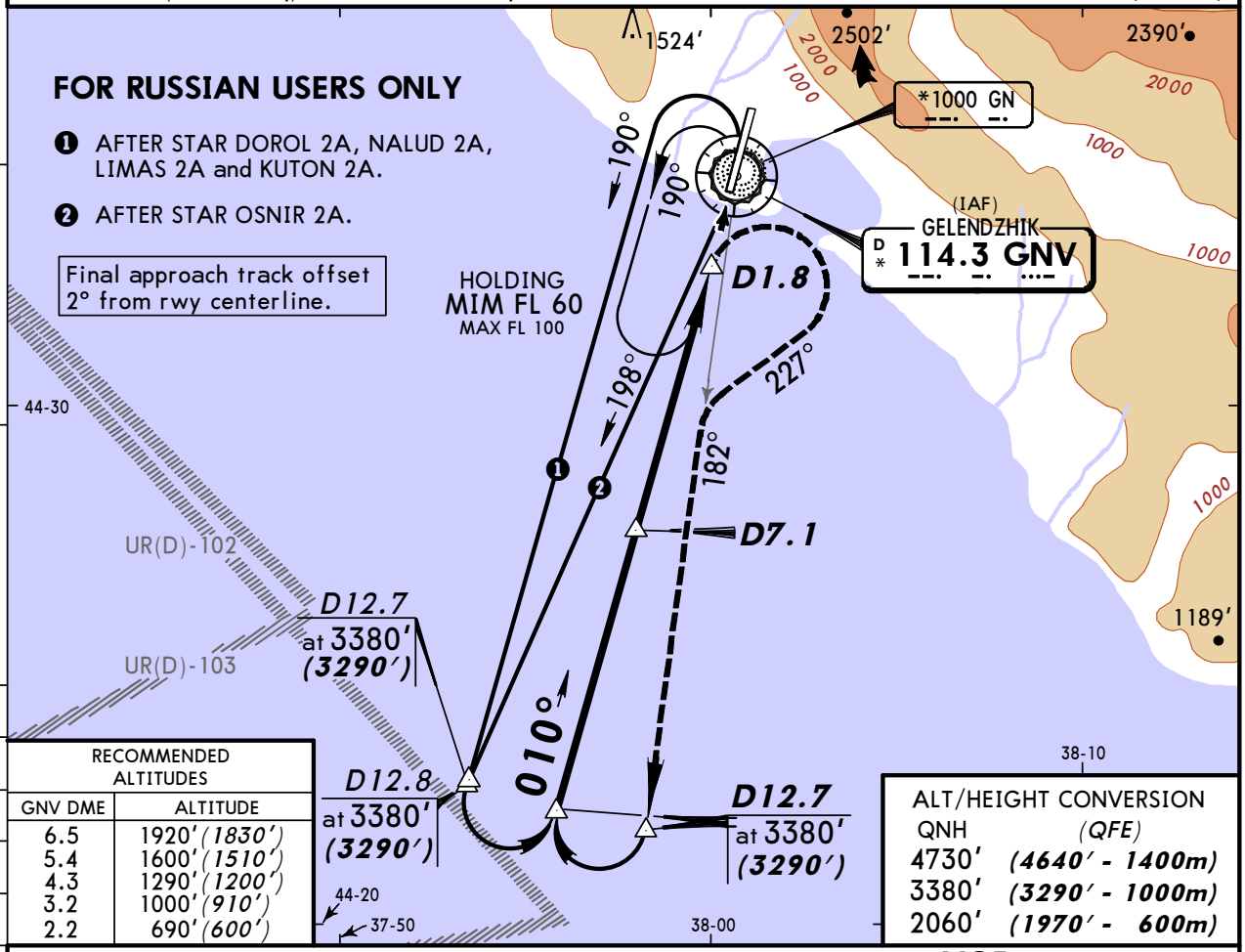


| RECOMMENDED ALTITUDES | |
|---|---|
| GNV DME | ALTITUDE |
| 6.5 | 1920' (1830') |
| 5.4 | 1600' (1510') |
| 4.3 | 1290' (1200') |
| 3.2 | 1000' (910') |
| 2.2 | 690' (600') |

| ALT/HEIGHT CONVERSION | |
|---|---|
| QNH | (QFE) |
| 4730' | (4640' - 1400m) |
| 3380' | (3290' - 1000m) |
| 2060' | (1970' - 600m) |

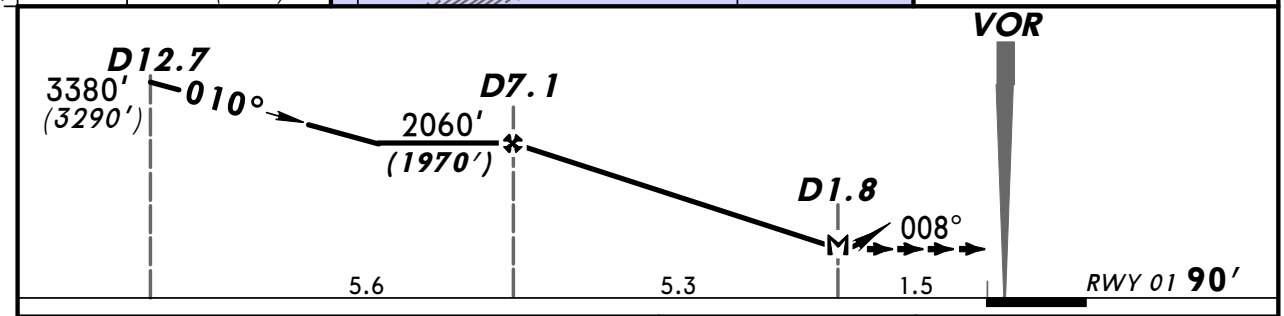


| Gnd speed-Kts | | 70 | 90 | 100 | 120 | 140 | 160 |
|---|---|---|---|---|---|---|---|
| Descent angle | 2.67° | 331 | 425 | 472 | 567 | 661 | 756 |
| MAP at D1.8 | | | | | | | |

ALS PAPI

3380' (3290') onto 227° RT

STRAIGHT-IN LANDING RWY 01

MDA(H) 590' (500')

ALS out

PANS OPS

| | |
|---|---|
| A | 3200m |
| B | |
| C | NOT AUTHORIZED |
| D | |

*CHANGES:* Communications. Trans level. Holding altitude.

© JEPPESEN, 2010, 2011. ALL RIGHTS RESERVED.

BRIEFING STRIP

| *ATIS | *GELENDZHIK Tower |
|---|---|
| 134.87 (Russian 133.37) | 122.7 Russian only |

| NDB | Final Apch Crs | Minimums Alt | MDA(H) | Apt Elev 132′ |
|---|---|---|---|---|
| GN *1000 | 011° | No FAF | Refer to Minimums | RWY 90′ |

**MISSED APCH:** Turn LEFT (CAT C & D: MAX 205 KT, BANK 20°) onto 191° climbing to 3380′ *(3290′)*, then according to chart or as directed.

3800′ 225° 4300′ 290°
MSA GNV VOR

Alt Set: MM (hPa on req) QNH on req (**QFE**) Trans level: FL 60 Trans alt: 4730′ ***(4640′)***
Final approach track offset 3° from rwy centerline.

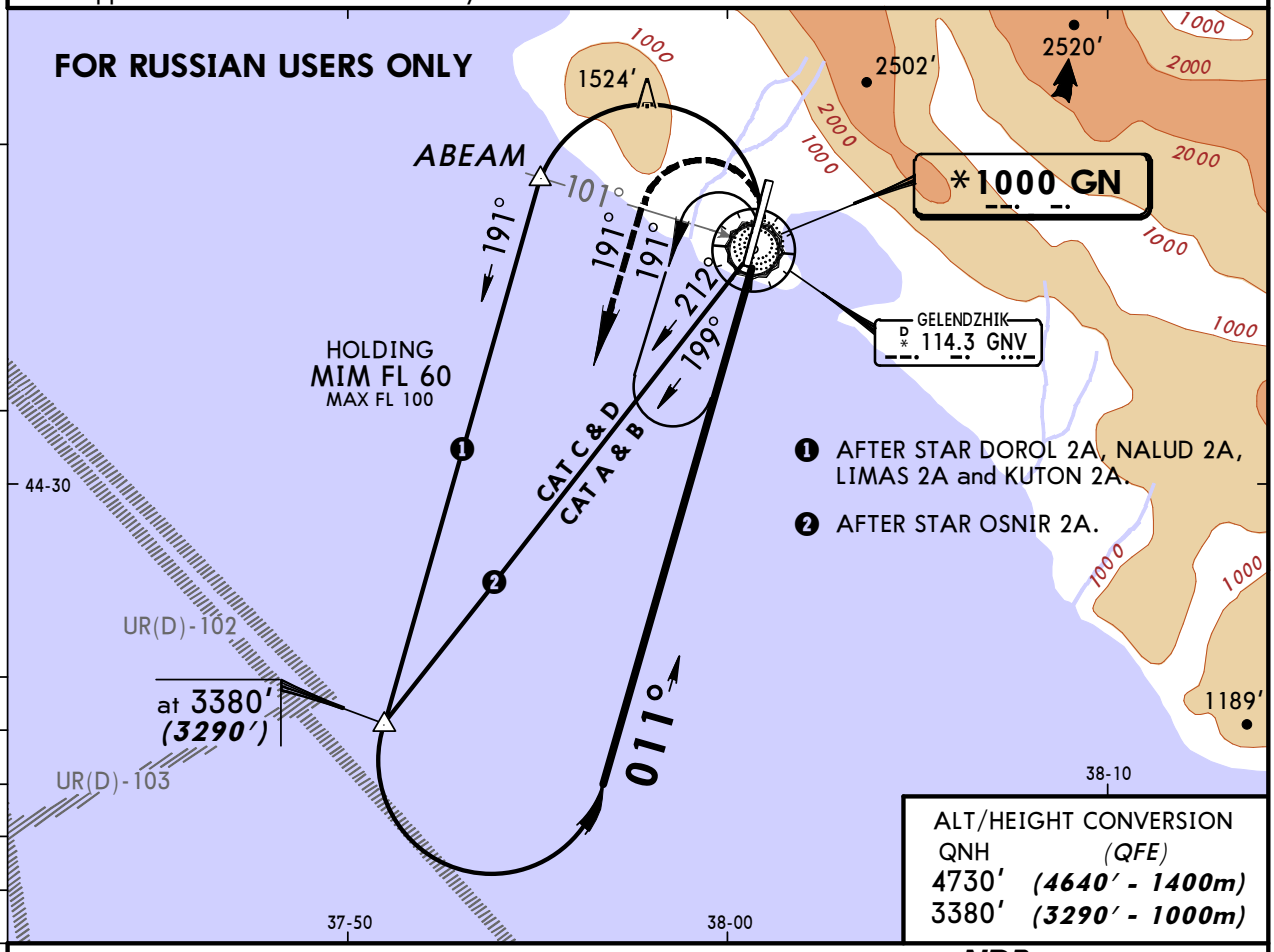


ALT/HEIGHT CONVERSION

| QNH | (QFE) |
|---|---|
| 4730′ | ***(4640′ - 1400m)*** |
| 3380′ | ***(3290′ - 1000m)*** |

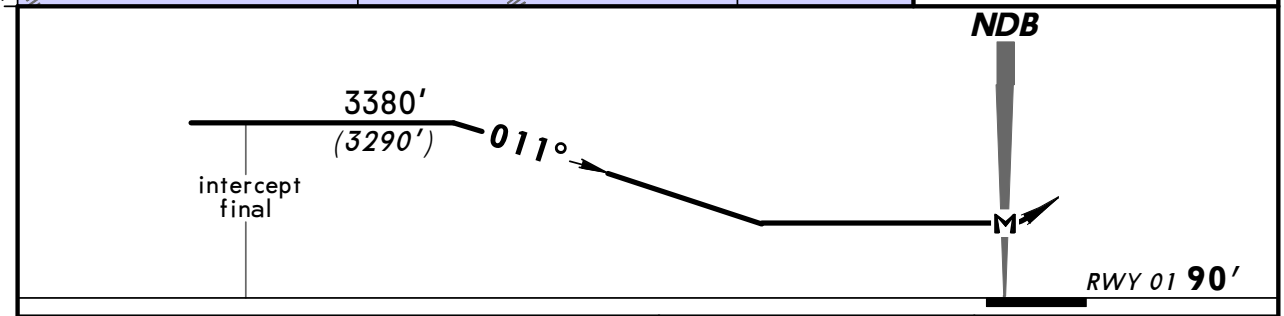


| Gnd speed-Kts | | 70 | 90 | 100 | 120 | 140 | 160 |
|---|---|---|---|---|---|---|---|
| Descent angle | 2.67° | 331 | 425 | 472 | 567 | 661 | 756 |
| MAP at NDB | | | | | | | |

ALS PAPI

Refer to Missed Apch above

STRAIGHT-IN LANDING RWY **01**

MDA(H) AB: 1460′ ***(1370′)***
CD: 1470′ ***(1380′)***

ALS out

PANS OPS

| | |
|---|---|
| A | 4800m |
| B | |
| C | |
| D | |

*CHANGES:* Communications. Trans level. Holding altitude.

© JEPPESEN, 2010, 2011. ALL RIGHTS RESERVED.

(c) JEPPESEN SANDERSON, INC., 2013, ALL RIGHTS RESERVED

JEPPESE
JeppView for Windo

## Chart changes since cycle 16-2013

ADD = added chart, REV = revised chart, DEL = deleted chart.

| ACT | PROCEDURE IDENT | INDEX | REV DATE | EFF DATE |
|---|---|---|---|---|

**GELENDZHIK, (GELENDZHIK - URKG)**

(c) JEPPESEN SANDERSON, INC., 2013, ALL RIGHTS RESERVED


# TERMINAL CHART CHANGE NOTICES

## No Chart Change Notices for Airport URKG